MECHANICAL ENGINEERING DEPARTMENT

SWEP 2021

- SWEP – Students Work Experience Programme is a programme aim at providing the participating Engineering students the practical skills of general workshop and safety practices in the use of tools and equipment, as they are obtainable in the real world of Engineering practices. It is carried out within the school.
- The SWEP covers all the areas/department in engineering; each engineering student is to carry out activities covering all other engineering fields other than their major. The Programme is aimed at exposing the 200 level students to practical activities in the major disciplines of Civil, Electrical/Electronics and Mechanical Engineering works involving masonry, carpentry, welding, machine operations and fittings.
- Others are woodwork, foundry electrical wiring, equipment maintenance and repairs etc all within the University environment.

SOME OF THE ACTIVITIES CARRIED OUT

CUTTING OF IRON ROD USING HACK SAW

- The hack saw was assembled by connecting the frame and the blade pointing in the direction of the arrow. It should be noted that the forward direction cuts.
- Afterwards, the bench vice was set up to hold the iron rod at two ends. Using the measuring tape or a steel rule, 100 mm was marked out with a scriber and the hack saw was used to cut.
- Two pieces of a 100 mm iron rod were obtained from the long iron rod. After cutting, it is essential to smoothen the rough edges using a file.

OPERATIONS ON LATHE MACHINE

Figure 1: Lathe machine

A lathe is a machine tool that rotates a workpiece about an axis of rotation to perform various operations such as cutting, facing, turning, knurling, threading, etc. The lathe is the forerunner of all machine tools. The workpiece is held and rotated on its axis while the cutting tool is advanced along the line of a desired part.

Figure 2 (a): Thread made on an iron rod

Figure 2 (b): Turning of an iron rod

Types of Lathe Operation

i. Facing
ii. Striaght turning
iii. Chamfering
iv. Boring
v. Threading
vi. Drilling
i. Pulley grooving

CONSTRUCTION OF PARKER USING METALSHEETS

The parker was constructed with the use of hammer, anvil, steel rule, scriber, try square, rivet, bench vice, chisel, shear cutter, and file. From a large metal sheet, using a shear cutter, 25.5 cm by 25.5 cm metal sheet was cut out.

After which steel rule, try square, scriber and shear cutter were used for the marking out and cutting as shown in the Figure 3(a). This serves as what will be bended to form a parker.

After cutting, it was then taken to an anvil for bending using a hammer. However, the surfaces are required to be straightened first before bending to the required shape. The small bending machine is used since the metal sheet is about 1mm.

The handle was made with this dimension; a 18cm by 2.5 cm is cut out. Holes are being made at certain points where they are to be joined together and a riveting machine is used to join them together. To achieve a smooth surface, an hammer was then used to smoothen the surface.

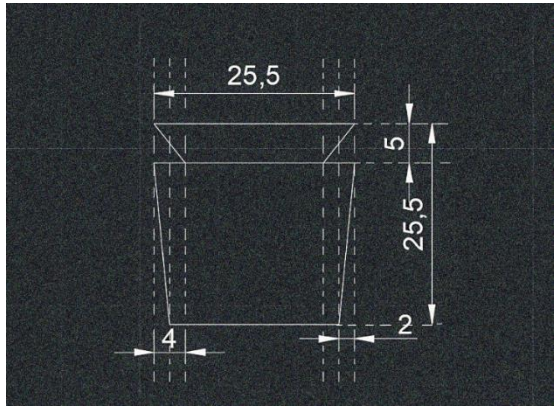

Figure 3 (a): Marking out of metal sheet

Figure 3 (c): Produced parker

Figure 3 (b): One of the students working on the parker

CONSTRUCTION OF DOOR HINGE

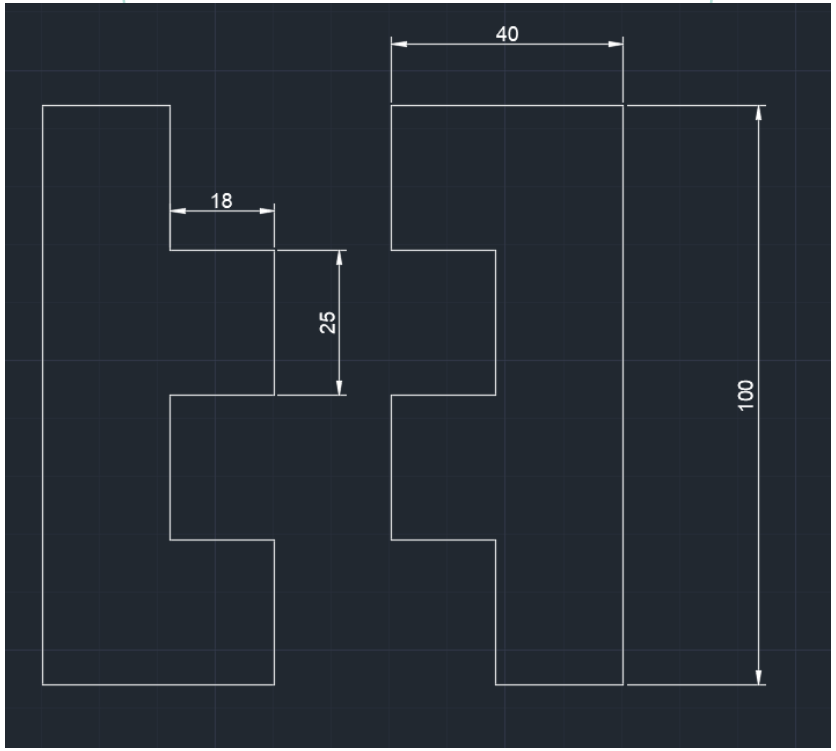

Hinge is a mechanical bearing that connects two solid objects, typically allowing only a limited angle of rotation between them. A hinge could be a metal, wood, or plastic that is used to join a door to its frame.

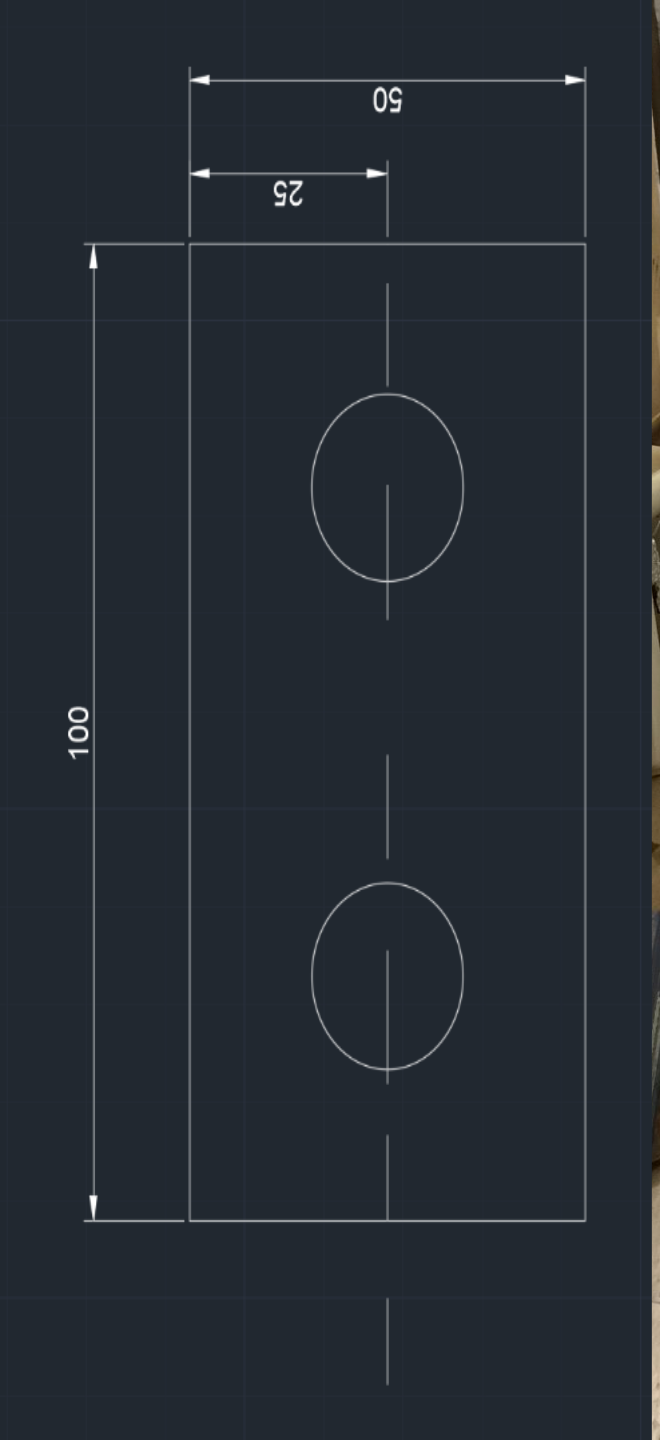

Similar to what was performed in 4.1 – Cutting of an iron rod using hack saw. However, here, a 100mm iron bar is cut and two holes are bored. The bar is first attached to the bench vice and 100mm is marked and cut out then further filed to smoothen the edges. Using a drilling machine with a drill bit attached to it, the iron bar is fixed on the bench vice and two holes are drilled 25mm from both ends.

DRILLING OPERATION ON A FLAT IRON BAR

SWEP 2021
MAIN PROJECT
(MOTORIZED BOAT)

MATERIALS & TOOLS USED FOR THE CONSTRUCTION OF BOAT

Some of the materials include planks, ply woods, bolts and nuts, nails, electrode, etc. At the beginning of the 2nd week of the SWEP, the diagrams and blueprints and prototype needed to begin our project was brought to us by our supervisor. The non-dimensioned orthographic views and isometric drawing are shown in Figure 4.

Figure 4: Working drawing of the boat

FRONT VIEW OF THE BOAT

Firstly, a pencil was used to mark out the decided measurement on the plywood, to aid a seamless and smooth cutting which was done with the use of an electric G-saw. It was first used by the supervisor before the students took over. Moreover, there was a possibility that a particular wood could not have been long enough, so the initiative to attach one end to another wood, so as to meet the required length . Continually this process was repeated for the other side of the boat by a student with the required supervision.

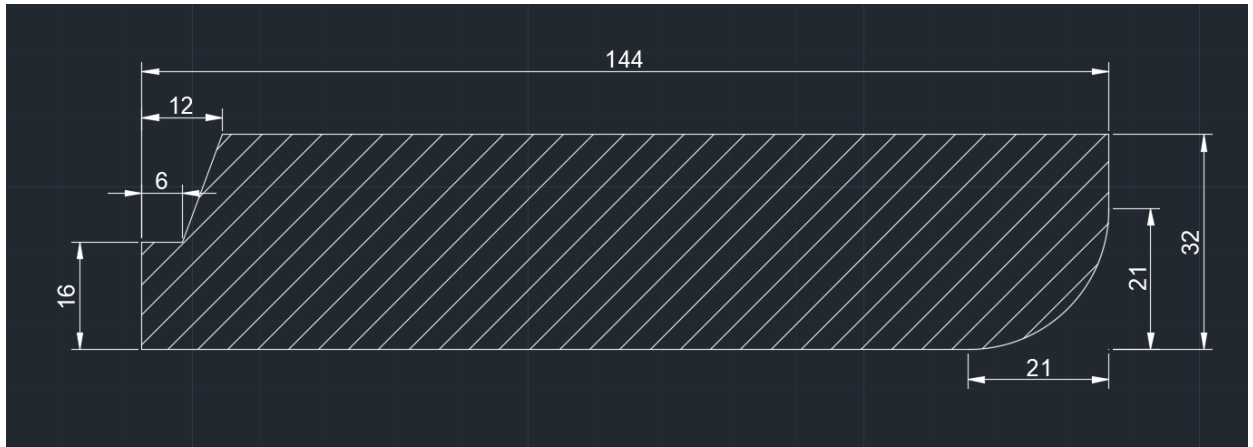

TOP VIEW/ PLAN OF THE BOAT

This is done by first flipping the boat over to work on the base. The needed pieces are cut out by a jig saw from the plywood with respect to the current frame and the body of the boat. Labelling of corresponding wood to be joined is done in order to avoid mix-up. The boat is now turned over with the base sitting on the floor and the wooden frame is reinforced with the wood pieces available. Each piece should be perpendicular to the frame. Finally, ply wood is placed/ attached over the frame of the boat to serve as footing for the boat

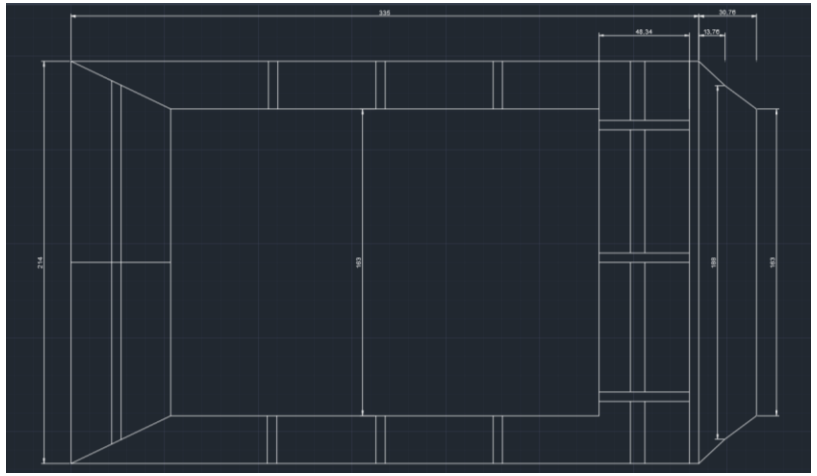

END VIEW OF THE BOAT

Here, woods are used to cover the open ends. However, at the back it was made to look like a curve because of the fillet present at the edges.

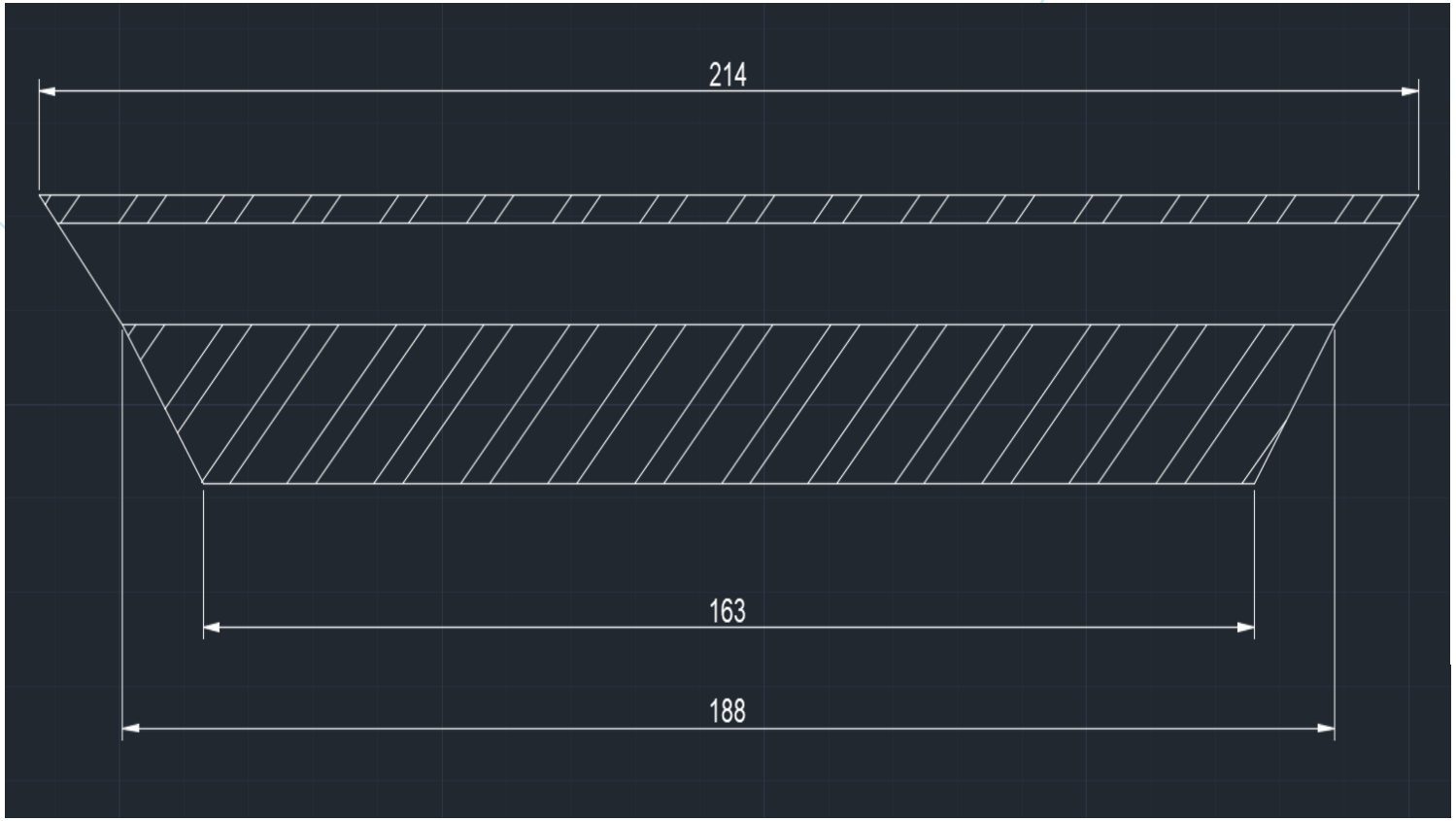

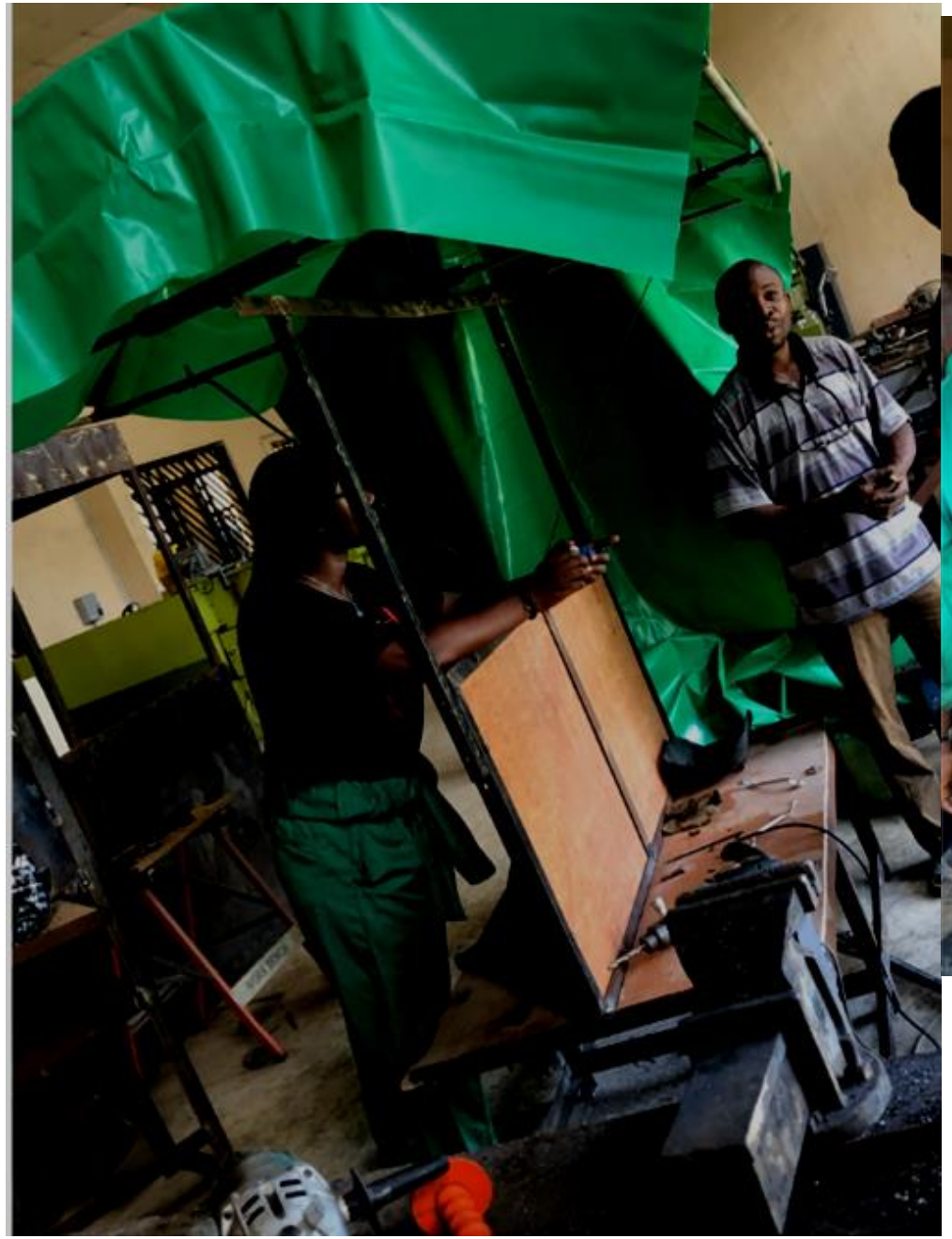

CANOPY AND SEAT CONSTRUCTION

CONSTRUCTION OF SEAT

The construction of seat and canopy involves the use of an arc welding tool. It is necessary that each operator must have a face shield and safety boots before using the arc welding machine as this is very important for safety. The construction of the seat starts with the cutting of the legs of the seat of length 18 inches which is about 46 cm. At the end of each leg, an iron of 5 cm by 5 cm is welded to it with a hole drilled, with a drilling machine, to it at the centre. This will serve as a means of connecting the seat with the flooring of the boat, which the use of nails.

The seat is capable of carrying a maximum of 6 people each with an average weight of 200 pounds. The seat is 147.4 cm long, 82 cm wide and 119 cm high. The seat has 7 legs, 6 at each end and 1 at the centre. Each angle iron is placed into consideration since they would serve as a base for the plywood on which the passengers will sit on. At the end of the welding processes, bolt and nuts are used to hold the wood to the angle iron and the excess length are cut off with a grinder.

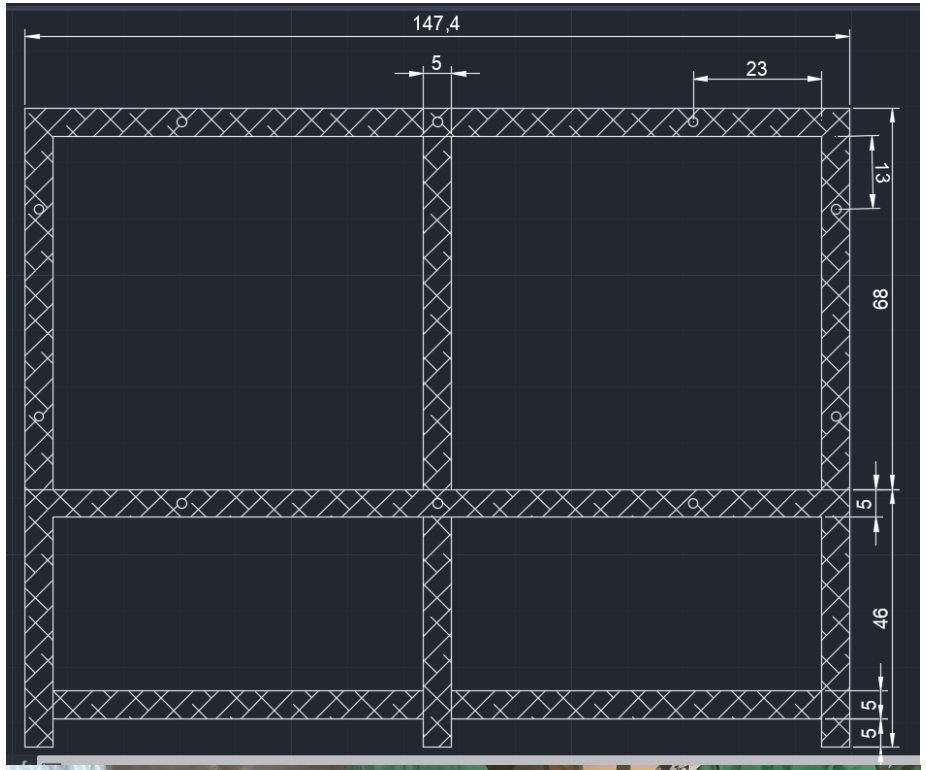

FRONT VIEW OF THE SEAT

This shows that at the base of the seat, angle irons are used as support at the 5 cm mark as shown in the AutoCAD drawing.

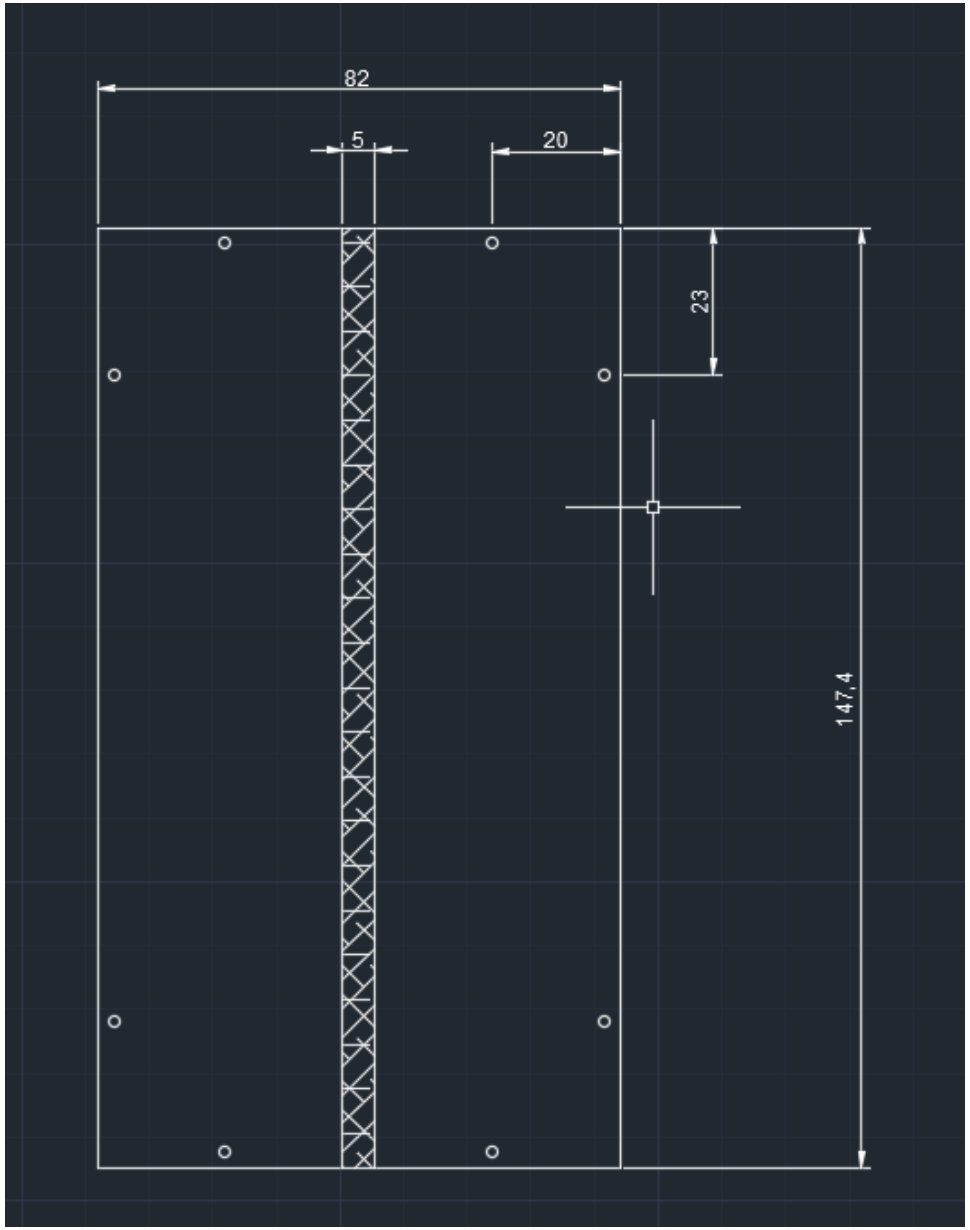

TOP VIEW OF THE SEAT

The holes shown at 20 cm and 23 cm to the edges shows the bolts and nuts used.

CONSTRUCTION OF CANOPY

A canopy is important as it will serve as a shade for the passengers in the boat. The canopy involves the use of an iron pipe which is bent with a bending machine pipe as shown in Fig 2.8.17.

With the bending machine pipe, a pipe of length 200cm is bent to fit that of length 162cm, with a radius of 37cm.

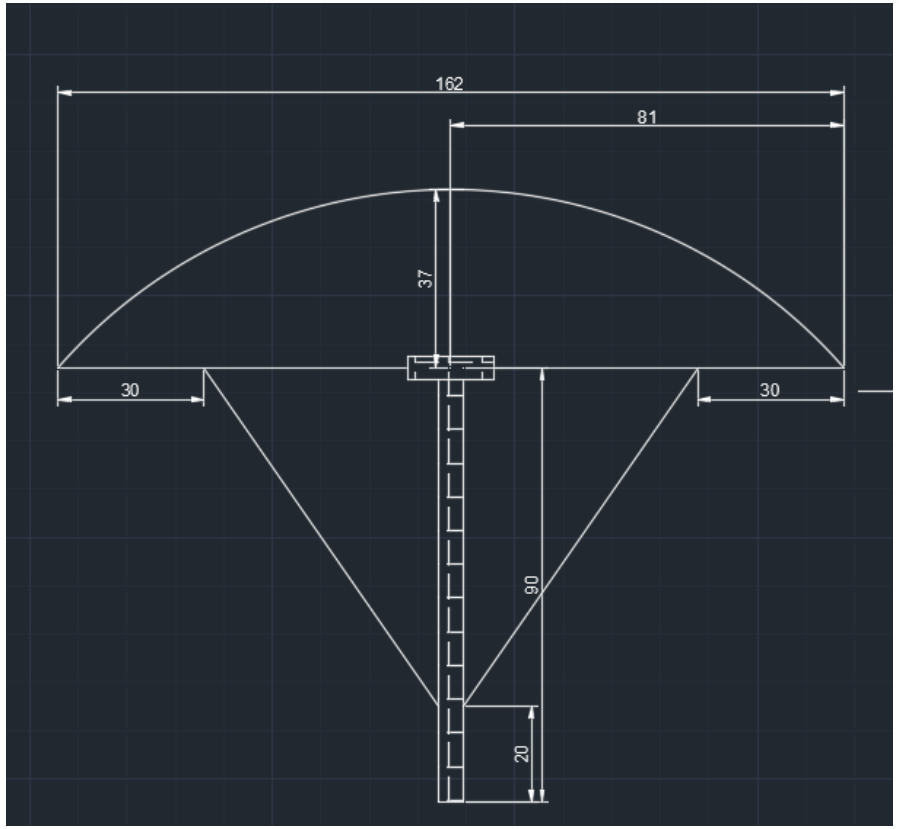

Two replicas of this are now made again and will be used to form a canopy in which the trampoline is used as cover. The three arcs are now joined together on another iron pipe of 200 cm at an interval of 100cm to each other. An angle iron of 18cm is used as a base for each arc. The arc is raised up by 70 cm from the seat with the use of bolt and nuts.



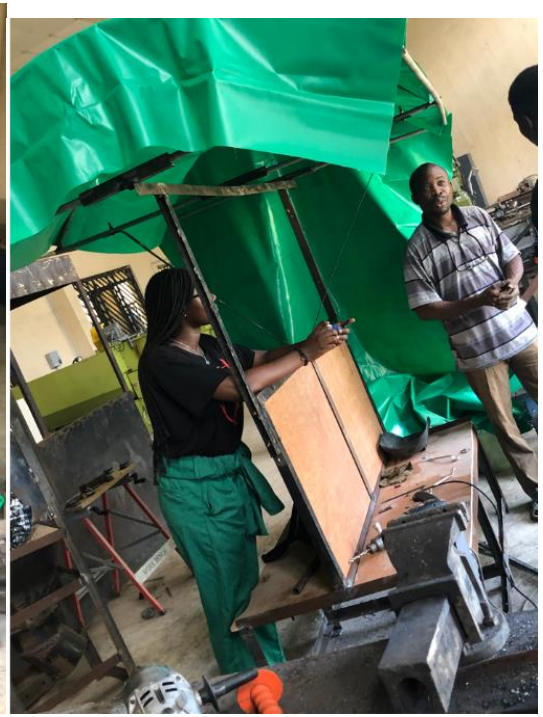


The motorized boat could not be completed because:

1. The materials supplied are provided the last day of the first week. This can be termed late as the first draft of the budget was submitted since March 2021.
2. The knuckle or universal joint was not supplied till date.
3. The internal combustion engine requested was not supplied till date.
4. No vehicle to pick the aluminium plates at PPD office. The mechanical engineering SWEP team members requested a tractor for this operation but the response obtained was that there was no fuel (diesel).
5. The non-provision of the above hampered the continuation of the work.
6. The SWEP period for this year is too short to complete such a huge project.

THANK YOU

2020/2021 MECHANICAL/ MECHATRONICS ENGINEERING STUDENTS